DISTRIBUTED BY
HARCO
ENTERPRISES LTD.
1-800-361-5361

Alfa Laval LKC Non-return Valve

Control/Check valves

Introduction

The Alfa Laval LKC Non-return Valve is a hygienic one-way check valve for use in various processes across the hygienic industries to prevent reverse flow. It is easy to install, ensuring safety and high product quality. It is available in two versions: the LKC-2 for vertical flow and the LKC-H for horizontal flow.

Application

The LKC Non-return Valve is widely used for single directional product flow through hygienic process lines across the dairy, food, beverage, brewery and many other industries.

Benefits

- Highly reliable, self-acting valve
- Easy to install
- Protects process equipment
- Prevents reverse flow

Standard design

The Alfa Laval LKC Non-return Valve consists of a valve body in two parts, valve plug and spring, assembled by means of a clamp ring and hygienically sealed with a special seal ring. A guide disc with four legs ensure alignment of the spring-loaded valve plug with an o-ring seal. The valve is available with weld and clamp ends for ISO and DIN tubing connections.

Working principle

The Alfa Laval LKC Non-return Valve opens and closes depending on the pressure. The spring acts on the valve plug and keeps the valve closed until the force from the pressure in the inlet exceeds the force of the spring. If a reverse flow should occur, the spring force and the pressure from the outlet will keep the valve closed. Required differential pressure for opening the valve when fitted in a vertical pipe is approximately 6 kPa (0.06 bar).

TECHNICAL DATA

Temperature	
Max. temperature:	140°C (EPDM)
Min. temperature:	-10°C

Pressure	
Max. product pressure:	1000 kPa (10 bar)

ATEX	
Classification:	II 2 G D[1]

[1] This equipment is outside the scope of the directive 2014/34/EU and must not carry a separate CE marking according to the directive as the equipment has no own ignition source

Mechanical

Required differential pressure for opening the valve when fitted in a vertical pipe, as shown in fig. 3, is approx. 6 kPa (0.06 bar).

Options

Product wetted seal rings of Nitrile (NBR) or Fluorinated rubber (FPM).

PHYSICAL DATA

Materials	
Product wetted steel parts:	1.4301 (304) / 1.4404 (316L)
External surface finish:	Bright (Machined Ra 1.6)
Internal surface finish:	Ra < 0.8 µm
Product wetted seals:	EPDM rubber

Pressure drop/capacity diagram

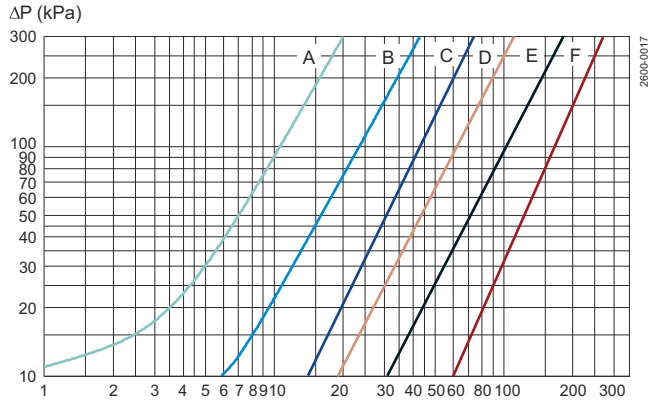

A = DN25; ISO25
B = DN32/40; ISO38
C = DN50; ISO51
D = DN63; ISO63.5
E = DN80; ISO76.1
F = DN100; ISO101.6

Note! For the diagram the following applies:
Medium: Water (20°C)
Measurement: In accordance with VDI 2173.

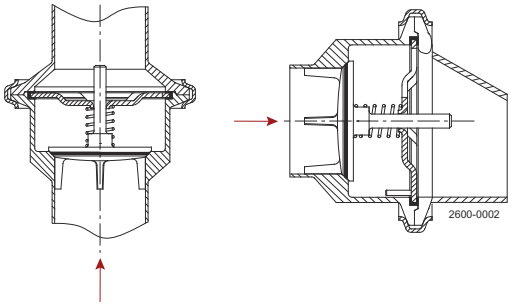

Figure 1. Flow direction.

Shows the optimal built-in situation. Other positions possible are e.g. horizontal. The four guide legs of the valve cone ensure good alignment.

90° rotation.

Dimensions (mm)

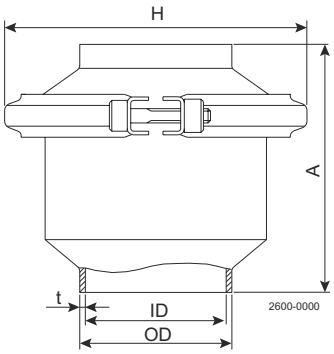

Figure 2. Vertical mounted

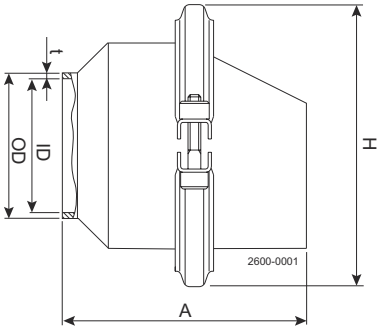

Figure 3. Horizontal mounted

Table 1. Dimensions - Vertical mounted

	ISO						DIN						
Size	**25**	**38**	**51**	**63.5**	**76.1**	**101.6**	**DN**	**DN**	**DN**	**DN**	**DN**	**DN**	**DN**
	mm	**mm**	**mm**	**mm**	**mm**	**mm**	**25**	**32**	**40**	**50**	**65**	**80**	**100**
A	62.5	75.0	87.5	95.0	115	155	62.5	75.0	75.0	87.5	95.0	115	155
OD	25.4	38.4	51.4	63.9	76.4	102	30.0	36.0	42.0	54.0	70.0	85.0	104
ID	22.5	35.5	48.5	60.5	72.0	97.6	26.0	32.0	38.0	50.0	66.0	81.0	100
t	1.45	1.45	1.45	1.7	2.2	2.2	2	2	2	2	2	2	2
H	72.0	85.5	99	127	138	164	72.0	85.5	85.5	99	127	138	164
Weight (kg)	0.5	0.7	1.0	1.7	2.4	4.3	0.5	0.7	0.7	1.0	1.7	2.4	4.3

Table 2. Dimensions - Horizontal mounted

	ISO				
Size	**25**	**38**	**51**	**63.5**	**76.1**
	mm	**mm**	**mm**	**mm**	**mm**
A	95.5	86.4	104.1	119.4	139.7
OD	25.4	38.4	51.4	63.9	76.4
ID	22.5	35.5	48.5	60.5	72.0
t	1.45	1.45	1.45	1.7	2.2
H	72.0	85.5	99.0	127.0	138.0
Weight (kg)	0.5	0.7	1.0	1.7	2.4

DISTRIBUTED BY
HARCO
ENTERPRISES LTD.
1-800-361-5361

This document and its contents are subject to copyrights and other intellectual property rights owned by Alfa Laval Corporate AB. No part of this document may be copied, re-produced or transmitted in any form or by any means, or for any purpose, without Alfa Laval Corporate AB's prior express written permission. Information and services provided in this document are made as a benefit and service to the user, and no representations or warranties are made about the accuracy or suitability of this information and these services for any purpose. All rights are reserved.

© Alfa Laval Corporate AB

How to contact Alfa Laval
Up-to-date Alfa Laval contact details for all countries are always available on our website at www.alfalaval.com